SPECIAL CONSIDERATIONS FOR PROPERTIES SERVED BY VILLAGE-OWNED GRINDER PUMPS/LOW PRESSURE SANITARY SEWERS

The following shall be shown on the plans as applicable:

- The existing pump station and control panel are to be protected during construction. Any required repair or replacement, or modification of any component of the grinder pump or low-pressure system shall be performed by Village personnel at the owner's expense. All new and/or replacement parts and equipment shall be as manufactured and supplied by Environment One Corporation.
- Sewer service valves may be operated by Village personnel only.
- A **dedicated,** single-phase, 30-ampre, 240-volt power supply with an external quick-disconnect shall be required to the control panel. Indicate proposed control panel location on the plan. Control panel and pump station must be intervisible and not more that 80 feet apart.
- Tracer wire from new 1-1/4" HDPE service line shall be brought to surface adjacent to grinder pump location.
- The existing grinder pump core shall remain in service throughout construction Upon completion of construction and application for bond refund, a new grinder pump core shall be required. Said core shall supplied and installed by Village personnel at the owner's expense. The existing core shall remain Village property.
- Gravity sanitary sewer service to grinder pump shall be 4" PVC SDR 26 conforming to ASTM D2241, 4.5" O.D. Call out minimum slope. Note that the inlet and discharge are on opposite sides of the unit. Call for a cleanout and any change in direction of the gravity service.

PROPERTIES SERVED BY LOW-PRESSURE SEWER SYSTEMS Updated 04/21/05

	Address	Street		Address	Street
1.	2825	ARROWWOOD	51.	2785	GEMINI
2.	2875	ARROWWOOD	52.	1900	GREENBRIER
3.	2925	ARROWWOOD	53.	2000	GREENBRIER
4.	2955	ARROWWOOD	54.	2500	GREENBRIER
5.	2975	ARROWWOOD	55.	3060	GREENBRIER
6.	2985	ARROWWOOD	56.	3300	GREENBRIER
7.	1001	BLACKTHORN	57.	3333	GREENBRIER
8.	2001	BLACKTHORN	58.	3400	GREENBRIER
9.	2830	BLACKTHORN	59.	400	GREENBRIER
10.	2880	BLACKTHORN	60.	406	GREENBRIER
11.	2887	BLACKTHORN	61.	408	GREENBRIER
12.	2890	BLACKTHORN	62.	441	GREENBRIER
13.	3030	BLACKTHORN	63.	450	GREENBRIER
14.	3033	BLACKTHORN	64.	2590	HAZELNUT
15.	3035	BLACKTHORN	65.	2605	HAZELNUT
16.	3060	BLACKTHORN	66.	2635	HAZELNUT
17.	3065	BLACKTHORN	67.	2640	HAZELNUT
18.	3070	BLACKTHORN	68.	333	JUNEBERRY
19.	3075	BLACKTHORN	69.	505	JUNEBERRY
20.	3085	BLACKTHORN	70.	545	JUNEBERRY
21.	3095	BLACKTHORN	71.	560	JUNEBERRY
22.	3200	BLACKTHORN	72.	565	JUNEBERRY
23.	3210	BLACKTHORN	73.	645	JUNEBERRY
24.	3223	BLACKTHORN	74.	720	JUNEBERRY
25.	2590	CHIANTI	75.	725	JUNEBERRY
26.	2640	CHIANTI	76.	745	JUNEBERRY
27.	2680	CHIANTI	77.	770	JUNEBERRY
28.	2701	DAIQUIRI	78.	2600	LYNDALE
29.	2715	DAIQUIRI	79.	2640	LYNDALE
30.	2745	DAIQUIRI	80.	2642	LYNDALE
31.	2785	DAIQUIRI	81.	2	MEREDITH
32.	3059	DEERFIELD	82.	3	MEREDITH
33.	3069	DEERFIELD	83.	4	MEREDITH
34.	3079	DEERFIELD	84.	2800	ORANGE BRACE
35.	3620	DEERFIELD	85.	2801	ORANGE BRACE
36.	405	DUBONNET	86.	2841	ORANGE BRACE
37.	2930	DUFFY	87.	2860	ORANGE BRACE
38.	2990	DUFFY	88.	2880	ORANGE BRACE
39.	3190	DUFFY	89.	2920	ORANGE BRACE
40.	3194	DUFFY	90.	2929	ORANGE BRACE
41.	3195	DUFFY	91.	2941	ORANGE BRACE
42.	3200	DUFFY	92.	2950	ORANGE BRACE
43.	2627	GEMINI	93.	2975	ORANGE BRACE
44.	2640	GEMINI	94.	3000	ORANGE BRACE
45.	2680	GEMINI	95.	3011	ORANGE BRACE
46.	2700	GEMINI	96.	3030	ORANGE BRACE
47.	2705	GEMINI	97.	3033	ORANGE BRACE
48.	2707	GEMINI	98.	3055	ORANGE BRACE
49.	2709	GEMINI	99.	3060	ORANGE BRACE
50.	2727	GEMINI	100.	3077	ORANGE BRACE

	Address	Street
101.	3100	ORANGE BRACE
101.	3115	ORANGE BRACE
102.	3179	ORANGE BRACE
103.	3400	ORANGE BRACE
104.	285	PORTWINE
105.	340	PORTWINE
106.	360	PORTWINE
107.	420	PORTWINE
108.	459	PORTWINE
109.	460	PORTWINE
110.	570	PORTWINE
111.	600	PORTWINE
112.	666	PORTWINE
113.	680	PORTWINE
114.	715	PORTWINE
115.	750	PORTWINE
116.	714	RINGLAND
117.	716	RINGLAND
118.	718	RINGLAND
119.	720	RINGLAND
120.	22419	RIVERWOODS
121.	22449	RIVERWOODS
122.	22547	RIVERWOODS
123.	2040	ROBINWOOD
124.	2045	ROBINWOOD
125.	2085	ROBINWOOD
126.	2100	ROBINWOOD
127.	2110	ROBINWOOD
128.	2114	ROBINWOOD
129.	2116	ROBINWOOD
130.	2121	ROBINWOOD
131.	2130	ROBINWOOD
132.	2112	ROBINWOOD
133.	1556	SAUNDERS
134.	3080	SCOTCH
135.	3100	SCOTCH
136.	3135	SCOTCH
137.	485	SHERRY
138.	495	SHERRY
139.	535	SHERRY
140.	590	SHERRY
141.	605	SHERRY
142.	615	SHERRY
143.	620	SHERRY
144.	640	SHERRY
145.	300	THORNMEADOW
146.	330	THORNMEADOW
147.	649	THORNMEADOW
148.	385	THORNMEADOW
149.	410	THORNMEADOW
150.	433	THORNMEADOW
151.	460	THORNMEADOW
152.	475	THORNMEADOW
153.	505	THORNMEADOW
154.	520	THORNMEADOW
155.	555	THORNMEADOW
156.	555	TIMBER
157.	600	TIMBER
158.	650	TIMBER
159.	3284	TIMBERWOOD
160.	65	TREASURE
161.	69	TREASURE
162.	72	TREASURE
163.	470	WHITE OAK
164.	471	WHITE OAK
165.	474	WHITE OAK
166.	475	WHITE OAK

E/One Sewers™

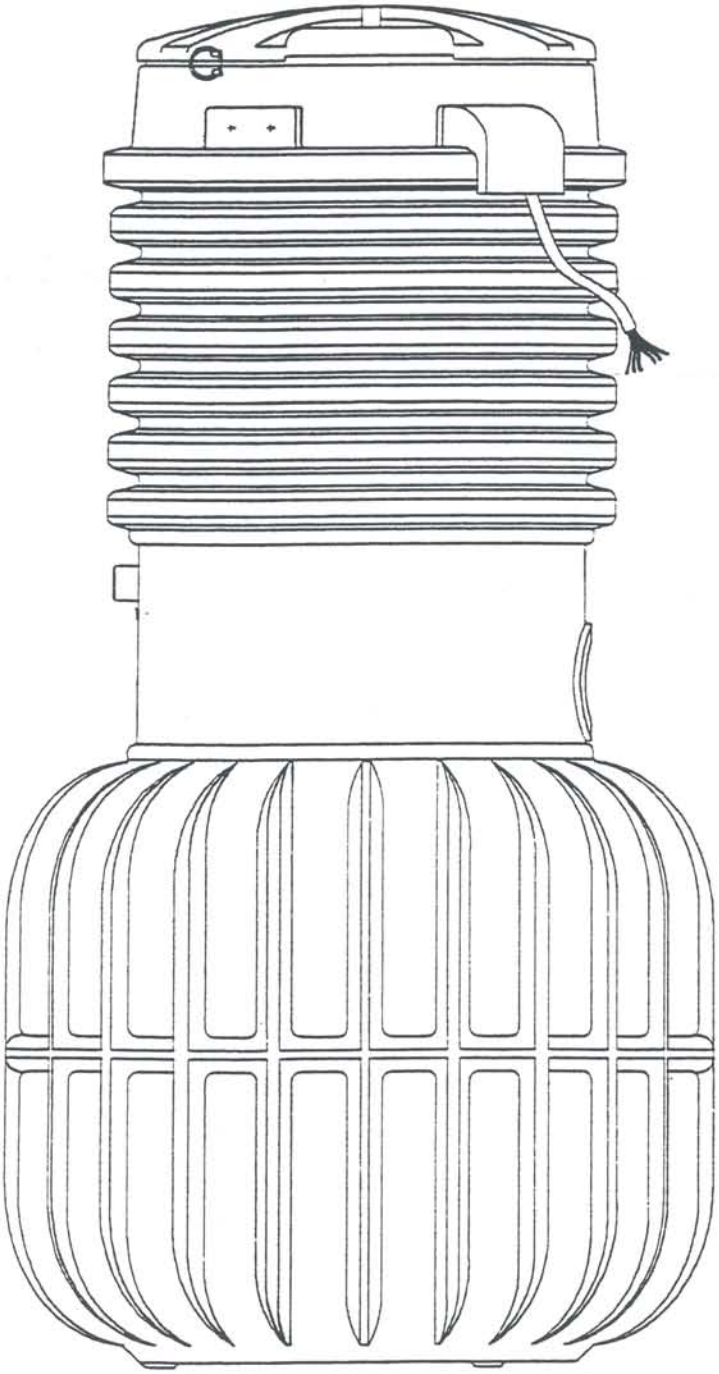

GP2012

TYPICAL INSTALLATION INSTRUCTIONS

Environment One Grinder Pump Feature Identification

1. GRINDER PUMP BASIN – High density polyethylene (HDPE).

2. ACCESSWAY COVER – FRP.

3. ELECTRICAL QUICK DISCONNECT (EQD) – Cable from pump core terminates here.

4. POWER AND ALARM CABLE – Circuits to be installed in accordance with local codes.

5. ALARM PANEL – NEMA 4X enclosure. Equipped with circuit breakers. Locate according to local codes.

6. ALARM DEVICE – Every installation is to have an alarm device to alert the homeowner of a potential malfunction. Visual devices should be placed in very conspicuous locations.

7. INLET – EPDM grommet (4.5" ID). For 4.5" OD DWV pipe.

8. WET WELL VENT – 2.0" tank vent, supplied by factory in units with accessways.

9. GRAVITY SERVICE LINE – 4" DWV, (4.5 OD). Supplied by others.

9a. STUB-OUT – 4" X 5' Long **watertight** stub-out, to be installed at time of burial unless the gravity serviceline is connected during installation. Supplied by others.

10. DISCHARGE VALVE – 1-1/4" Female pipe thread.

11. DISCHARGE LINE – 1-1/4" Nominal pipe size. Supplied by others.

12. CONCRETE ANCHOR – See Ballast Calculations for specific weight for your station height. Supplied by others.

13. BEDDING MATERIAL – 6" minimum depth, round aggregate, (gravel). Supplied by others.

14. FINISHED GRADE – Grade line to be 1” to 4” below removable lid and slope away from the station.

15. VENT – Indoor installation. See section 6, Venting, on page 6.

16. VALVE – Full ported ball valve. Recommended option, for use during service operations. Supplied by others.

17. CONDUIT – 1" or 1-1/4", material and burial depth as required per national and local codes. Conduit must enter panel from bottom and be sealed per NEC section 300.5 & 300.7. Supplied by others.

18. UNION – 1-1/4" or compression type coupling. Supplied by others. (Do not use rubber sleeve and hose clamp type coupling.)

19. VALVE – Ball valve, must provide a full-ported 1-1/4" round passage when open. Supplied by others.

Figure 1a

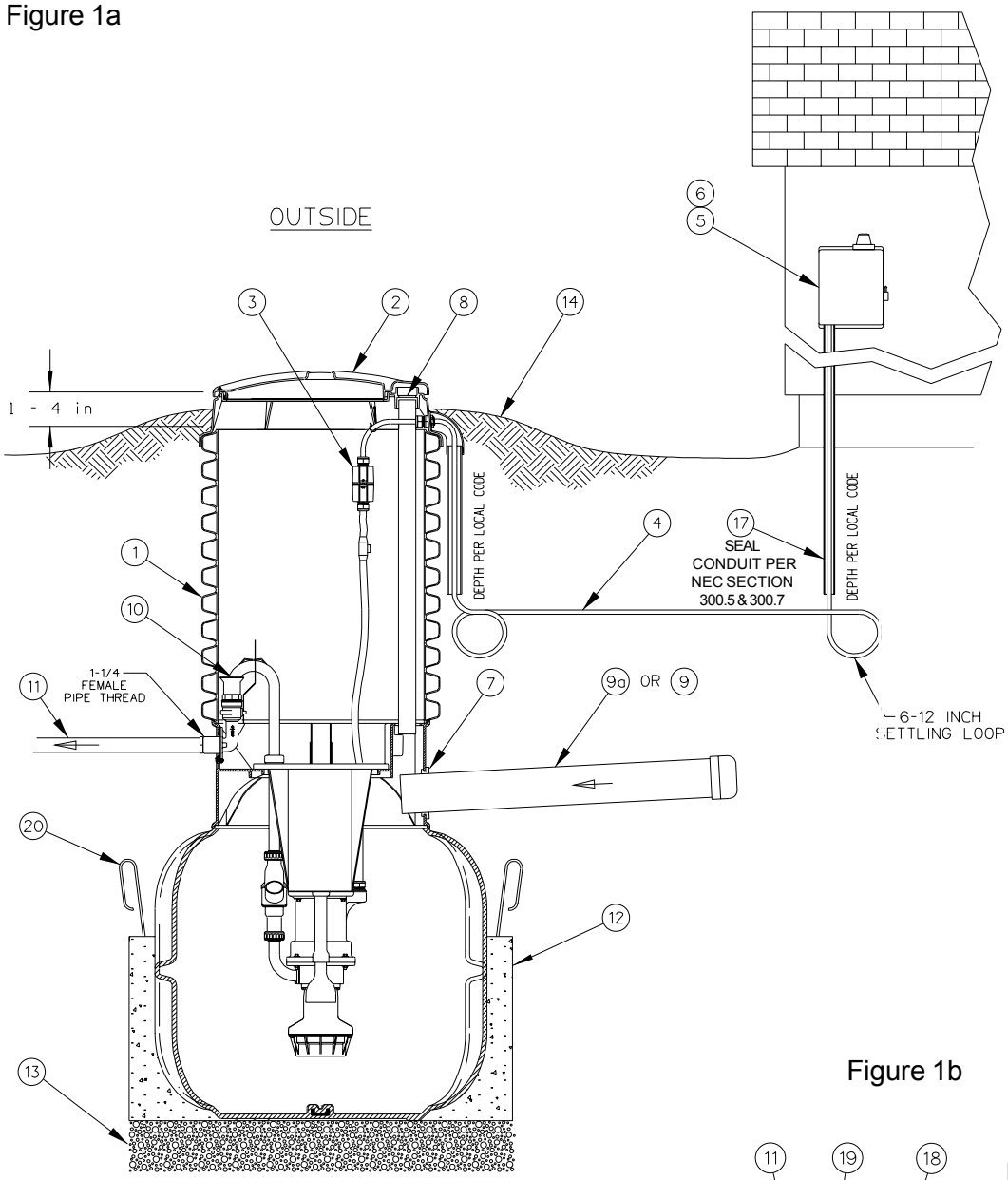

Figure 1b

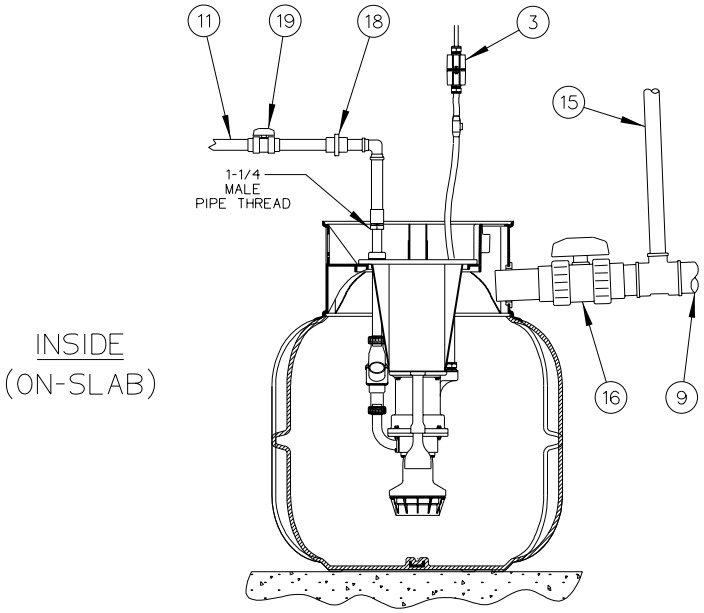

FAILURE TO COMPLY WITH INSTALLATION INSTRUCTIONS WILL VOID WARRANTY

Installation Instructions for Model 2012 Grinder Pump

The Environment One Grinder Pump is a well-engineered, reliable and proven product: proper installation will assure years of trouble-free service. The following instructions define the recommended procedure for installing the Model 2012 Grinder Pump. These instructions cover the installation of units with and without accessways.

This is a sewage handling pump and must be vented in accordance with local plumbing codes. This pump is not to be installed in locations classified as hazardous in accordance with National Electric Code, ANSI / NFPA 70. All piping and electrical systems must be in compliance with applicable local and state codes.

1. REMOVE PACKING MATERIAL: The User Instructions must be given to the home owner. Hardware supplied with the unit, if any, will be used at installation.

2. TANK INSTALLATION: The tank is supplied with a standard grommet for connecting the 4" DWV (4.50" outside Dia.) incoming sewer drain. Other inlet types and sizes are optional (caution 4" DR-35 pipe is of smaller diameter and won't create a water tight joint with the standard grommet). Please confirm that you have the correct inlet before continuing. If a concrete ballast is attached to the tank lift only by the lifting eyes, (rebar) embedded in the concrete. Do not drop, roll, or lay tank on its side. This will damage the unit and void the warranty.

• **If the tank has no accessway (Fig. 1b): (Indoor Installation)** The pump may be installed on or in the basement floor (Fig. 1b). If the tank is to be set on the floor it must be a flat and level bearing surface. If the tank is to go into the basement floor, it must be anchored to prevent unit from floating due to high ground water (see Chart 1, page 12 for weight).

• **If the tank is to go in the floor:** A hole of the correct width and depth should be excavated. The tank must be placed on a 6" bed of gravel made up of naturally rounded aggregate, clean and free flowing, with particle size not less than 1/8" or more than 3/4" in diameter. The wet well should be leveled and filled with water prior to pouring the concrete to prevent the tank from shifting. If it's necessary to pour the concrete to a level above the inlet, the inlet must be sleeved with an 8" tube before pouring.

There must be a minimum clearance of three feet directly above the tank to allow for removal of the pump core.

• **If the tank has an accessway (Fig. 1a):** Excavate a hole to a depth, so that the

removable cover extends above the finished grade line. The grade should slope away from the unit. The diameter of the hole must be large enough to allow for a concrete anchor. Place the unit on a bed of gravel, naturally rounded aggregate, clean and free flowing, with particles not less than 1/8" or more than 3/4" in diameter. The concrete anchor is not optional. (See Chart 1 on page 12 for specific requirements for your unit.)

The unit should be leveled and the wet well filled with water to the bottom of the inlet to help prevent the unit from shifting while the concrete is being poured. The concrete must be vibrated to ensure there are no voids. If it is necessary to pour the concrete to a higher level then the inlet, the inlet must be sleeved with an 8" tube before pouring.

If your unit is a model taller than 93" it may be shipped in two sections, requiring field assembly. See Field Joint Assembly Instructions on page 8 for additional information.

3. INLET PIPE INSTALLATION: Mark the inlet Pipe 3 1/2" from the end to be inserted. Inlet pipe should be chamfered and lubricated with a soap solution. Lubricate the inlet grommet with soap solution as well. Insert the pipe into the grommet up to the 3 1/2" mark. Inspect to ensure the grommet has remained intact and in place.

4. DISCHARGE: The use of polyethylene pipe SDR 11 or SIDR 7 is required Use compression type fittings to provide a smooth inner passage. It is recommended that a Redundant Check Valve Assembly (E/One part no. PC0051GXX) be installed between the pump discharge and the street main on all installations. Never use a ball-type valve as a check valve. We recommend the valve be installed as close to the public right-of-way as possible. Check local codes for applicable requirements.

CAUTION: *Redundant check valves on station laterals and anti-siphon/check valve assemblies on grinder pump cores should not be used as system isolation valves during line tests.*

- **If the tank has no accessway: (Indoor Installation)** The discharge connection is a 1-1/4" male NPT. The discharge piping must incorporate a shut-off valve and a union with a minimum pressure rating of 160 PSI, or a suitable piping disconnect to allow for removal of the pump core. The valve should be of the type that provides a full-ported passage (i.e. a ball or gate valve). A standard 1-1/4" union or a compression type coupling should be used as a disconnect joint.
- **If the tank has an accessway:** There is a ball valve and a quick disconnect

Figure 2b

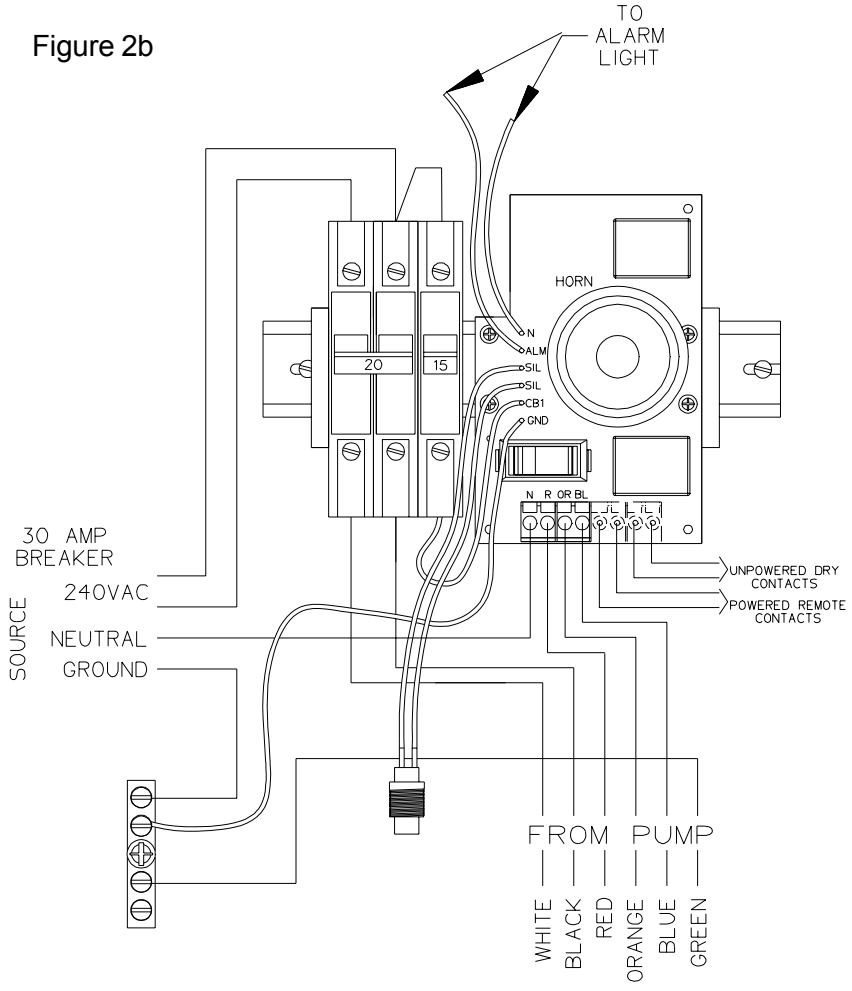

240 VOLT WIRING

pre-installed in the accessway. There is a 1-1/4" female NPT discharge connection on the outside of the tank 41" above the bottom of the tank.

5. BACKFILL REQUIREMENTS: Proper backfill is essential to the long term reliability of any underground structure. Several methods of backfill are available to produce favorable results with different native soil conditions.

The most highly recommended method of backfilling is to surround the unit to grade using Class I or Class II backfill material as defined in ASTM 2321. Class 1A and Class 1B are recommended where frost heave is a concern, Class 1B is a better choice when the native soil is sand or if a high, fluctuating water table is expected. Class I, angular crushed stone offers an added benefit in that it needs minimal compaction. Class II, naturally rounded stone, may require more compactive effort, or tamping, to achieve the proper density.

If the native soil condition consist of clean compactable soil, with less than 12% fines, free of ice, rocks, roots, and organic material it may be an acceptable backfill. Such soil must be compacted in lifts not to exceed one foot to reach a final Proctor Density of between 85% and 90%. Non-compactible clays and silts are **not** suitable backfill for this or any underground structure such as inlet or discharge lines. If you are unsure of the consistency of the native soil it is recommended that a geotechnical evaluation of the material be obtained before specifying backfill.

Another option is the use of a flowable fill (i.e., low slump concrete). This is particularly attractive when installing grinder pump stations in augured holes where tight clearances make it difficult to assure proper backfilling and compaction with dry materials. Flowable fills should not be dropped with more than four feet between the discharge nozzle and the bottom of the hole since this can cause separation of the constituent materials.

6. VENTING: The unit must be properly vented to assure correct operation of the pump. If you have an indoor unit it can be vented through the 2" port supplied at the top of the wet well or through the incoming sewer line with a 2" pipe (the vent must be within four feet of the grinder pump, and before the first change of direction fitting).

The outdoor units are supplied with a vent pipe from the wet well to the top of the accessway. Failure to *properly vent* the tank will result in faulty operation and will void the warranty.

7. ELECTRICAL CONNECTION: (Supply panel to E/One Alarm Panel) Before proceeding, verify that the service voltage is the same as the motor voltage shown on the name plate. An alarm device is to be installed in a conspicuous location where it can be readily seen by the home owner. An alarm device is required on every installation. There shall be no exceptions.

Wiring of supply panel and Environment One Alarm Panel shall be per figure 2a and 2b, alarm panel wiring diagrams and local codes.

8. ELECTRICAL CONNECTION: (Pump to Panel) (Fig. 4) The Environment One GP2000 grinder pump station is provided with a cable for connection between the station

Figure 3

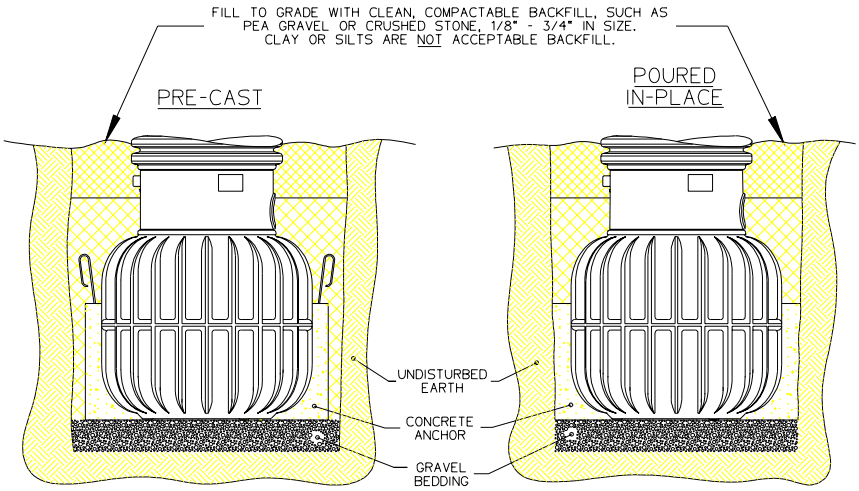

TYPICAL IN-GROUND SECTION VIEW

and the alarm panel (supply cable). The supply cable is shipped inside the station with a small portion fed through the cable connector mounted on the wall of the fiberglass shroud. The supply cable, a six conductor tray cable, meets NEC requirements for direct burial as long as a minimum of 24" burial depth is maintained. Those portions of the cable which have less than 24" of cover must be contained in suitable conduit. This includes the vertical portion dropping to a 24" depth at the station and the length rising out of the ground at the control panel. *NOTE: Wiring must be installed per national and local codes. Conduit must enter panel from bottom and be sealed per NEC section 300.5 & 300.7.*

8a. Installing E/One supply cable:

1) Open the lid of the station and locate the cable and the feed-through connector on the wall of the shroud. If the station has a field joint and was delivered in two pieces be sure the two halves of the EQD are securely assembled together. Loosen the nut on the connector and pull the supply cable out through the connector until it hits the crimped on stop feature on the cable, approximately 24" from the EQD. *****IMPORTANT: All but 24" of the cable must be pulled out of the station, and the portion of the cable between the EQD and the molded in cable breather should be secured in the hook provided to ensure that the pump functions properly. Do* not *leave the excess cable in the station.***

2) Retighten the nut. This connection must be tight or ground water will enter the station.

3) Feed the wire through the length of conduit (contractor provided) which will protect it until it is below the 24" burial depth.

4) Position the conduit vertically below the cable connector along side of the station reaching down into the burial depth. Attach the small protective shroud provided with the station to protect the exposed cable where it enters the station. Four self tapping screws are provided.

5) Run the cable underground, in a trench or tunnel, to the location of the E/One panel. Leave a 6-12 inch loop of cable at each end to allow for shifting and settling. Connections made at the panel are shown in the panel wiring diagram (Figs. 2a and 2b).

9. DEBRIS REMOVAL: Prior to start-up test procedure, the core must be removed and the incoming sewer line flushed to force all miscellaneous debris into the tank. Next, all liquid and debris must be removed. Once tank is clean, reinstall the pump and proceed with the test.

10. TEST PROCEDURE: When the system is complete and ready for use, the following steps should be taken to verify proper installation and operation:

a) Make sure that the discharge shutoff valve is fully open. This valve must not be closed when the pump is operating. In some installations there may be a valve, or valves, at the street main that must also be open.

b) Turn ON the alarm power circuit breaker.

c) Fill tank with water until the alarm turns ON. Shut off water.

d) Turn ON pump power circuit breaker; the pump should immediately turn on. Within one minute the alarm will turn off. Within three minutes the pump will turn off.

Figure 4

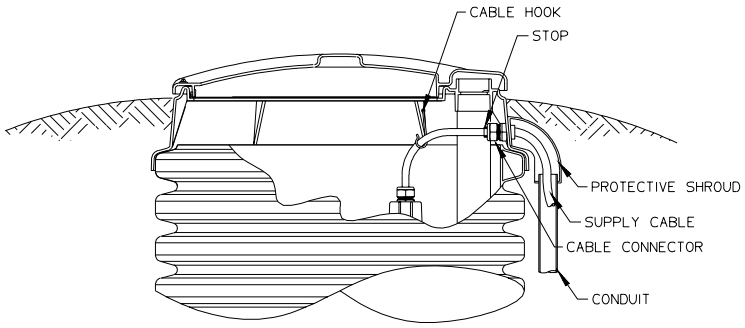

Supply Cable Voltage Drop:
120 VAC Pump = .195 Volts per Foot of Cable
240 VAC Pump = .098 Volts per Foot of Cable
(Maximum Recommended Length = 100 Feet)

TYPICAL SUPPLY CABLE CONFIGURATION

Field Joint Assembly Instructions

IT IS EXTREMELY IMPORTANT THAT THE JOINT IS SEALED PROPERLY BEFORE BACKFILLING. EXCAVATING A UNIT FOR REPAIR IS VERY EXPENSIVE AND CAN BE EASILY AVOIDED BY USING PROPER CAUTION DURING THE FOLLOWING PROCEDURE.

Parts included in Field Joint Kit: Identify all parts before proceeding with installation.

(16) 3/8-16 X 1-1/2 long screws
(16) 3/8-16 Elastic Stop Nuts
(32) Flat Washers
(1) Length Sealant (Sika) Tape
(1) Hole Punch
(1) Vent Pipe Extension

1) Carefully clean and dry both accessway flanges with solvent. **IMPORTANT: Sealing surfaces must be dry to ensure the sealant adheres correctly.**

2) Starting at one hole of tank flange, apply two layers of Sika Tape around the inside half of the flange. Align the outside edge of the tape with the bolt circle. Move to the adjacent hole and apply one layer of Sika Tape around the outside of the flange. Align inside of tape with the bolt circle. Remove the backing paper as you lay the adhesive on the flange. **Do not stretch Sika tape during application; it may result in a leak.** The tape should overlap at the end by approximately 1/2 inch, as shown in Fig. 5a. If a section of Sika Tape is misapplied, the bad section may be cut out and replaced. Cut away the poorly laid portion cleanly with a knife and be sure to over lap the tape at each end about 1/2 inch.

3) Using the tool provided, punch a hole through the tape at each of the 16 existing bolt holes in the flange. **Be careful to keep the exposed sealant clean and dry.**

4) Insert three of the sixteen 3/8-16 x 1-1/2" long bolts, with a flat washer, into the flange attached to the upper part of the accessway. These will act as guides while aligning the bolt pattern of the two flanges.

5) Support the upper accessway section a few inches over the tank with the green stripes on each lined up. Once aligned, lower the upper section onto the mating flange using the three bolts to guide it to the proper position (fig. 5b).

6) Insert the remaining 13 bolts with flat washers into the flanges. Place a flat washer and elastic stop nut on the end of each bolt, turning the nut on just enough to hold the washer in place.

7) Tighten up the bolts until the sealant begins to squeeze out from between the flanges. To ensure a consistent, sturdy seal tighten them in the following sequence: 1, 9; 5, 13; 3, 11; 7, 15; 2, 10; 4, 12; 6, 14; 8, 16. Always be sure to tighten one bolt and then the bolt at the position 180° from it, see figure 1 for position numbers.

8) Using the same sequence as in step 7 tighten each bolt to 60 in-lbs. Visually inspect the joint, each bolt and each nut should have a flat washer between it and the flange, and a uniform amount of sealant should be protruding from the seam along the entire perimeter.

In the event that there are any voids in the sealant, the joint may leak. Take corrective actions if necessary and be sure that the joint is leak free before continuing.

9) Install the vent pipe extension piece which was shipped inside the upper piece of the accessway. Push the extension pipe into the bell mouth fitting on the pipe installed in the wet well tank. Be sure the pipe is seated correctly. Slide the top end of the extension pipe into the receptacle on the bottom of the lid.

Figure 5a

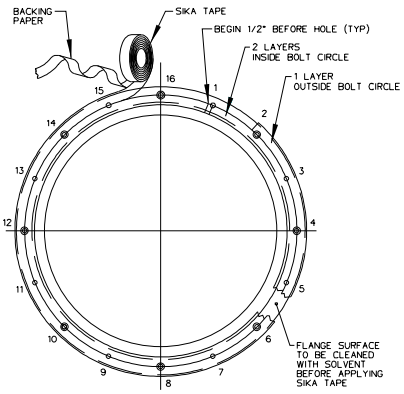

Figure 5b

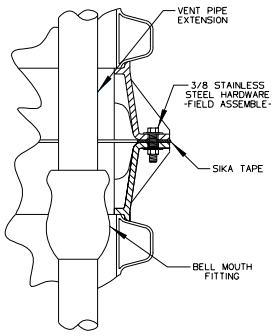

Lifting Instructions

FAILURE TO FOLLOW THESE INSTRUCTIONS COMPLETELY WILL VOID WARRANTY.

1. Transporting unit to installation site: **Always lift a unit from the bottom for the purpose of transportation. The station should be received attached to a pallet for this purpose.** Never roll a station or move it on its side.

2. No Ballast (to be poured in place): If the concrete anchor is to be poured while the station is in place lift the unit using 2 nylon straps wrapped around the accessway making a sling, as shown below. Keep station oriented vertically to avoid any damage. Only lift from the accessway to put unit in hole, not for moving any distance.

3. Precast Ballast: Never lift a station that has a ballast attached by any means except the rebar. The weight of the concrete will damage the station if you attempt to lift it from any part of the station.

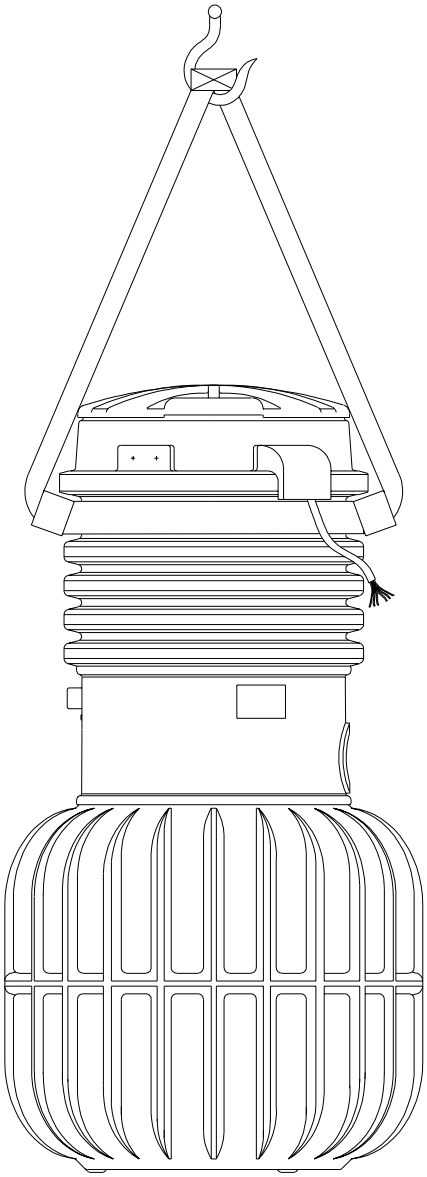

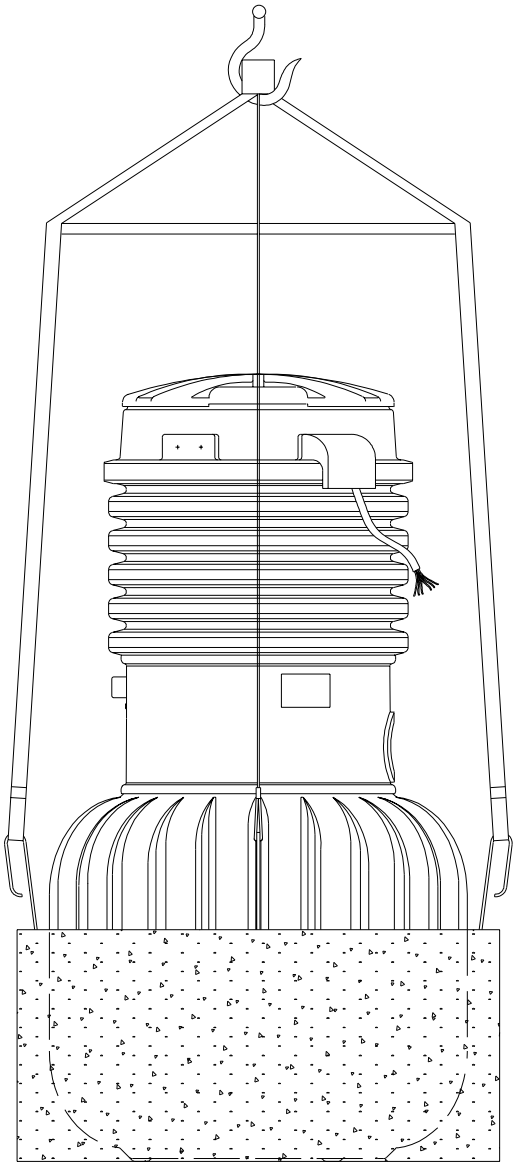

E/One Series 2000 Grinder Pump Station
Ballast Calculations

Any buried vessel that is submerged, or partially submerged, in water will be acted on by an upward buoyant force that attempts to return the vessel to a non-submerged state. The magnitude of this buoyant force is equal to the volume of the vessel that is submerged multiplied by the density of water. On most in-ground installations a ballast, or concrete anchor, of proper volume and weight is required to resist the buoyant force. The amount of ballast required for a given set of installation site conditions may be calculated as follows.

Installation Site Assumptions

1. Low water table – under worst case ground water or flood conditions only the wet well portions of the E/One grinder pump stations will be submerged.

2. Backfill materials are per E/One Installation Instructions (Models 2010, 2012, 2014, 2015 & 2016).

3. The consulting engineer should perform a soil test to determine if the assumptions that have been made are valid. If the site conditions differ from these assumptions, then the consulting engineer must revise the calculations as shown in this document.

Physical Constants

1. Density of Water = 62.4 lb/cu ft
2. Density of Concrete = 150 lb/cu ft (in air)
3. Density of Concrete = 87.6 lb/cu ft (in water)
4. Density of Dry Compacted Backfill = 110 lb/cu ft
5. Density of Saturated Backfill = 70 lb/cu ft

Procedure

A. Determine The Buoyant Force Exerted On The Station

1. Determine the buoyant force that acts on the grinder pump station when the wet well is submerged in water.
2. Subtract the weight of the station from the buoyant force due to the submerged wet well to determine the net buoyant force acting on the station.

B. Determine The Ballast Force Exerted On The Station

1. Determine the ballast force applied to the station from the concrete, saturated soil and dry soil.

C. Subtract The Ballast Force From the Buoyant Force.

1. Note – if the installation site conditions are different from those listed above, the consulting engineer should recalculate the concrete ballast.

Ballast Calculations

The following calculations are to outline the areas used to determine the volumes of the different materials for the ballast. All sections referred to in the calculations are marked on the accompanying drawing.

E/One Series 2000 Grinder Pump Station
Ballast Calculations

Sample Calculation GP 2012-93 Station

Volume of Station Wet Well = 17.9 cu ft
Station Weight = 306 lb
Station Height = 91.1”

A. Buoyant Force

1. The buoyant force acting on the submerged GP 2012-93 is equal to the weight of the displaced water for the section of the tank that is submerged (wet well).

$F_{buoyant}$ = (density of water)(volume of 2012-93 wet well)
= (62.4 lb/cu. ft)(17.9 cu. ft)
= 1117 lb

2. The net buoyant force acting on the station ($F_{net\text{-}buoyant}$) is equal to the buoyant force ($F_{buoyant}$) minus the weight of the grinder pump station.

$F_{net\text{-}buoyant}$ = 1117 lb – 306 lb
= 811 lb

B. Ballast Force

1. Determine the volume of concrete (if applicable) & soil (saturated and dry)

Section I: Used To Determine The Volume Of Concrete

Area = (Height)(Width) + (Triangular Area)
= (20”)(3.1”) + (1/2)(7”)(5.5”)
= 81.3in^2

Volume= (Area)(Average Perimeter of the cylinder)
= (81.3in^2)(2π)(20.95”)
= (10695.2 in^3)(1/1728 ft^3/in^3)
= 6.1 ft^3

Section II: Used To Determine The Volume Of Saturated Soil

Area = (Height)(Width) + (Trapezoidal Area)
= (14”)(3.1”) + (1/2)(6.53” + 12.03”)(7”)
= 108.4in^2

Volume = (Area)(Average Perimeter of the cylinder)
= (108.4in^2)(2π)(17.45”)
= (11880.8in^3)(1/1728 ft^3/in^3)
= 6.9 ft^3

E/One Series 2000 Grinder Pump Station
Ballast Calculations

Sample Calculation GP 2012-93 Station Continued

Section III: Used To Determine The Volume Of Dry Soil

Area =(Width)(Height)
= (9.3”)(54.1”)
= 503.1in^2

Volume = (Area)(Average Perimeter of the cylinder)
= (503.1in^2)(2π)(17.9”)
= (56583.2 in^3)(1/1728 ft^3/in^3)
= 32.7 ft^3

2. Determine the combined ballast

Ballast (total) = Ballast (concrete) + Ballast (saturated soil) + Ballast (dry soil)

= ($V_{concrete}$)(density concrete in water) + (V_{soil})(density wet soil) + (V_{soil})(density dry soil)

= (6.1 cu ft)(87.6 lb/ft^3) + (6.9 cu ft)(70 lb/ft^3) + (32.7 cu ft)(110 lb/ft^3)

= 534.4 lb + 483 lb + 3597 lb

= 4614.4 lb

C. Subtract the buoyant force from the ballast force to determine the final condition

Final Condition = Ballast Force - Buoyant Force
= 4614.4 lb – 811 lb
= 3803.4 lb

The approach outlined above may be used to calculate the ballast requirements listed below.

GP Model	Wet Well Volume (cu ft)	FNet Buoyant (lb)	Station Weight (lb)	Fballast (lb)	Volume Concrete (cu ft)	Weight Concrete in Air (lb)
2012-60	17.9	841	276	2623.4	6.1	915
2012-73	17.9	829	288	3349.4	6.1	915
2012-93	17.9	811	306	4614.4	6.1	915
2012-128	17.9	772	345	7012.4	6.1	915
2012-159	17.9	742	375	9014.4	6.1	915

Chart 1

2012 -93

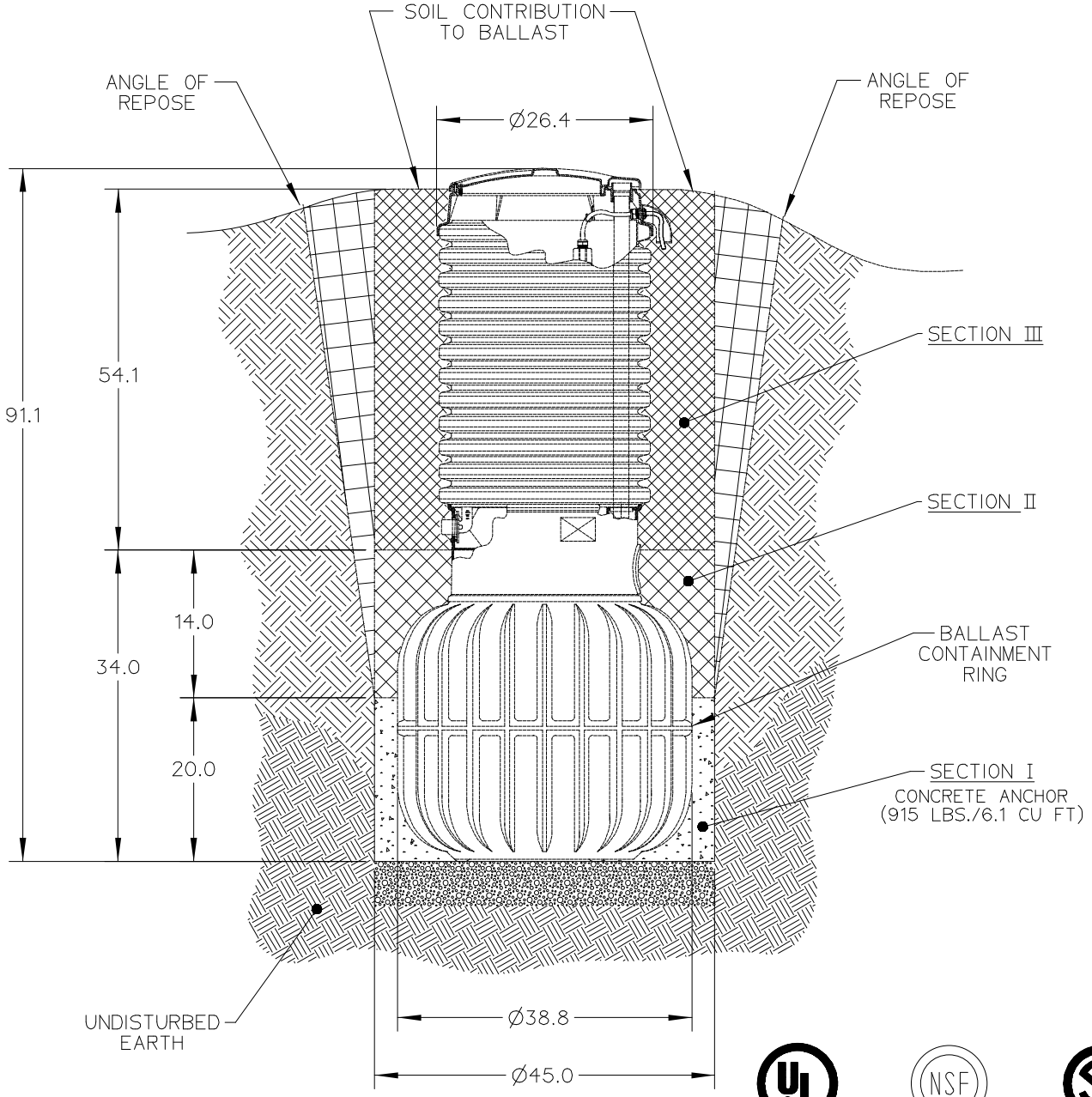

DRL	-	10/23/01	-	1/20
DR BY	CHK'D	DATE	ISSUE	SCALE

SEWER SYSTEMS

BALLAST INFORMATION
2012 SERIES

SECTION III - DRY SOIL (ACCESS WAY)

SECTION II - SATURATED SOIL (WET WELL)

SECTION I - CONCRETE ANCHOR

ROUND AGGREGATE (GRAVEL)

Adjusting the Height of a 2000 Series Grinder Pump Station

REMOVE EXISTING COVER ASSEMBLY (Fig. 6)

If your existing station has a welded-on cover shroud you will need the appropriate replacement cover kit (see Table 2 on page 15).

1. Turn off all power to the grinder pump station.
2. Remove the tank lid and the electrical shroud.
3. Unplug the electrical quick disconnect (EQD) and remove the EQD from the supply cable. *Note: DO NOT CUT CABLE*. Loosen liquid-tight cable connector and pull the supply cable out through the connector on the side of tank.
4. Tape the pump breather cable to the vent pipe in the tank.

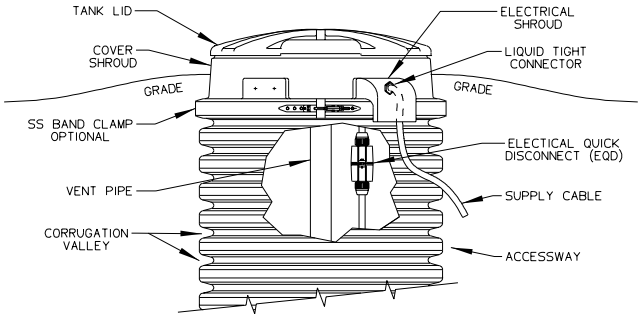

Figure 6

5. Remove the soil around the tank, exposing three of the tank corrugations below grade. Use caution not to damage buried cable.
6. Remove existing cover shroud.

6a. Welded-on shroud (standard) - Using a hand saw, cut the tank in the valley between the two corrugations at grade, discard existing welded on shroud and attached corrugations *(shroud is not to be reused)*. *Caution: Be careful not to cut either the vent pipe or the pump breather cable.*

6b. Clamped-on shroud - Remove band clamp and cover shroud.

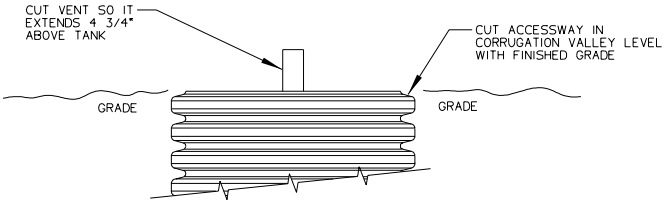

Figure 7

REDUCING STATION HEIGHT (Fig. 7)

7. Using a hand saw, cut the tank in the valley between the two corrugations at grade.
8. Cut Vent Pipe 4 ¾" above the cut made on the tank. *Proceed to step 16.*

INCREASING STATION HEIGHT (Fig. 8 and Fig. 9)

9. Remove the soil around the tank exposing it 18" deeper than the extension being installed. For example, if you have a 2' extension (not including the coupler) you must dig down 3'6" minimum from grade, if you have a 4' extension (not including the coupler) you must dig down 5'6" minimum from grade. Use caution not to damage buried cable.

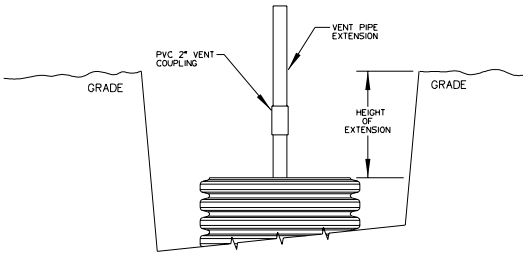

Figure 8

10. Measure from grade down 2' (for a 2' extension) or 4' (for a 4' extension) and mark accessway. Using a hand saw, cut the tank in the valley between the two corrugations that are closest to your mark. *Note: Make sure the welded on shroud of the extension will be at grade level. Be sure you are not cutting into the wet well and you must have two corrugations below your cut, if there are less than two corrugations, this extension kit can not be used.*

Caution: *Be careful not to cut either the vent pipe or the pump breather cable.*

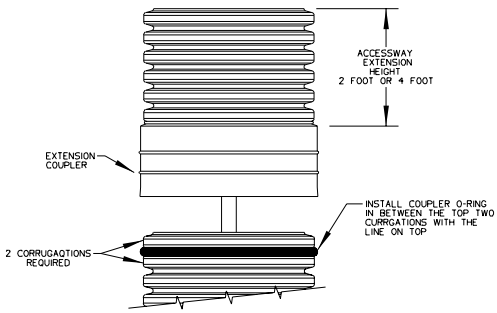

Figure 9

11. Attach the vent pipe extension with the 2" vent coupling, bringing the vent well above grade.

12. Clean all dirt and debris from top four corrugations on tank. Install the 24” coupler O-ring on the tank between the top two corrugations with the white or yellow line facing out and on top.

13. Lube extension coupler and coupler O-ring with pipe lube or dish soap.

14. Manually press coupling evenly over lubricated O-ring. If additional force is needed, place a plywood cover over the accessway and apply gentle mechanical pressure to the coupler. Note*: Care must be used when pushing down on the coupler. Excessive force or impact may result in damage and leakage.*

15. Frequent visual inspections during installation must be performed to determine when the tank has fully engage the coupler

INSTALL REPLACEMENT COVER ASSEMBLY (Fig. 10)

16. Clean top corrugation on accessway extension and mating surface of replacement shroud with acetone.

17. Liberally apply the silicone sealer provided to the under side of the replacement shroud where it will come in contact with the accessway extension.

18. Lube wet well vent grommet and vent pipe extension with pipe lube, non-grit hand cleaner or dish soap and slide vent pipe through grommet until tank shroud seats to accessway.

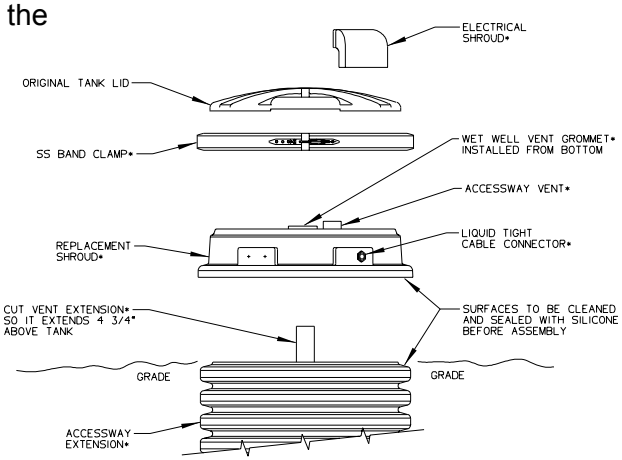

Figure 10

19. Place SS band clamp around top corrugation and the replacement shroud. Tap with a mallet around clamp to help seat the clamp. Torque stud assembly on band clamp to a maximum 125 inlb.

20. Reinstall the supply cable, EQD**, tank lid and electrical shroud and tighten cable connector. (**See “EQD wiring order,” Table 1)

21. Follow start-up procedures to ensure proper pump operation (you will find the start-up instructions in our service manual or the station installation instruction guide).

**EQD wiring order

PIN #	COLOR
1	Red
2	Black
3	White
4	Green
5	Orange
6	Blue

Table 1

Table 2

DESCRIPTION	PART NO.
Simplex station	PC0569G15
Simplex, flood plain config	PC0569G16
Duplex station	PC0569G17
Duplex, flood plain config	PC0569G18

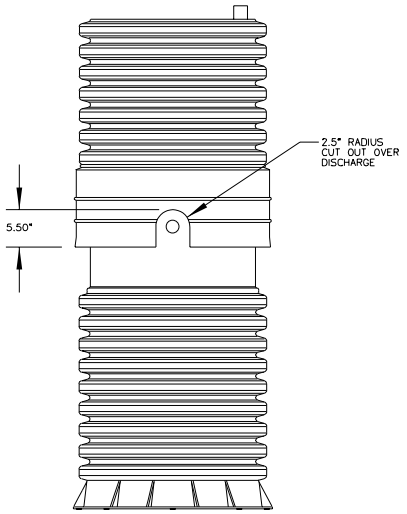

Figure 11

NOTE: IF EXISTING ACCESSWAY HAS ONLY 2 CORRUGATIONS (Fig. 11)

- If the coupler will not engage completely because the discharge piping is in the way and it doesn’t have a cut out you will need to cut a slot in the coupler.
- Using a hand, reciprocating, or hole saw cut an arch in the coupler, the cut-out is not to exceed 5.50" tall or 5.00" wide.

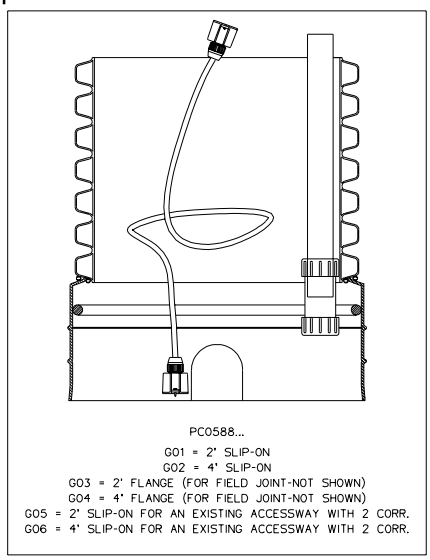

Figure 12

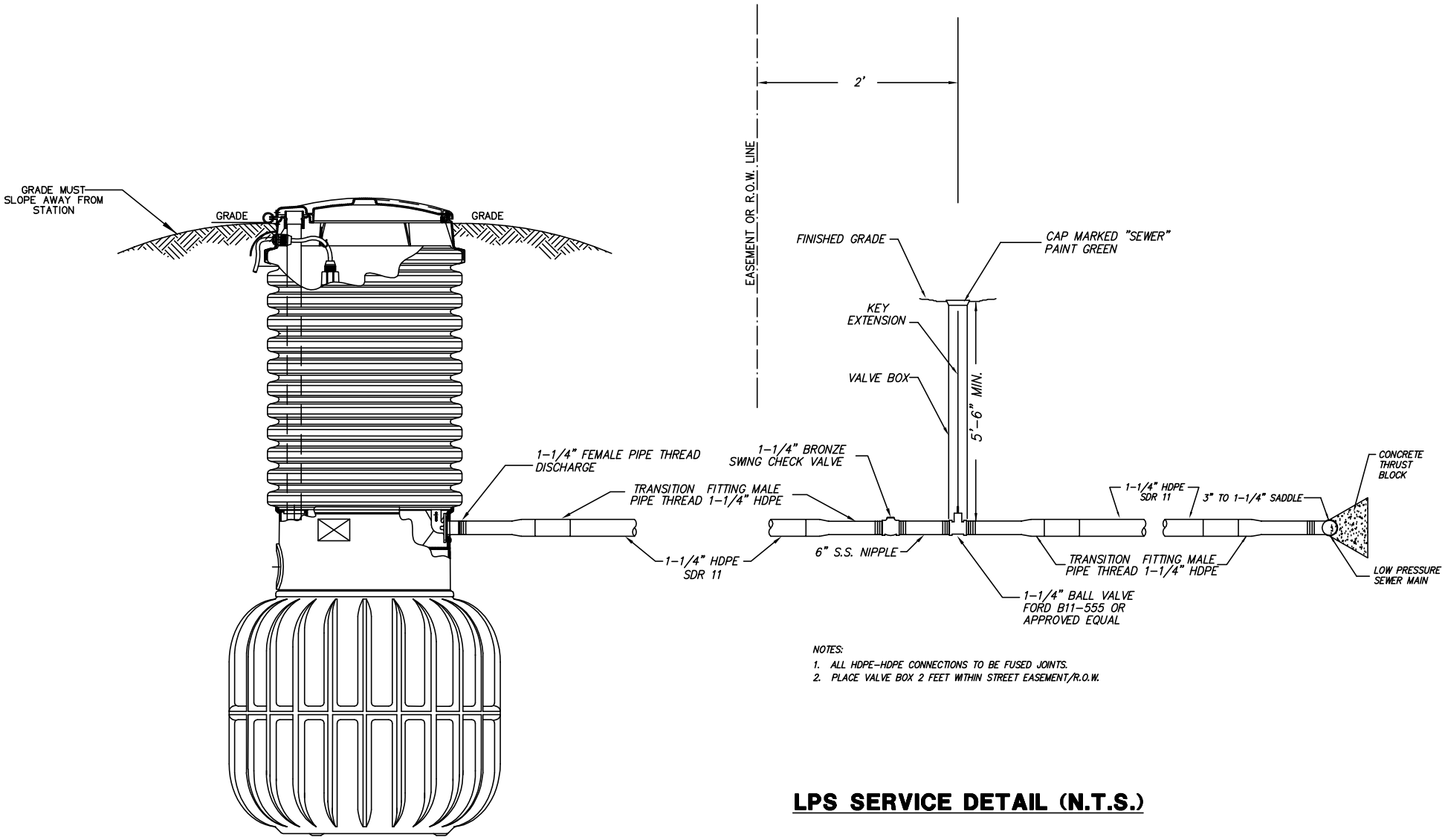

NOTES:

1. ALL HDPE-HDPE CONNECTIONS TO BE FUSED JOINTS.
2. PLACE VALVE BOX 2 FEET WITHIN STREET EASEMENT/R.O.W.

LPS SERVICE DETAIL (N.T.S.)

2012-93

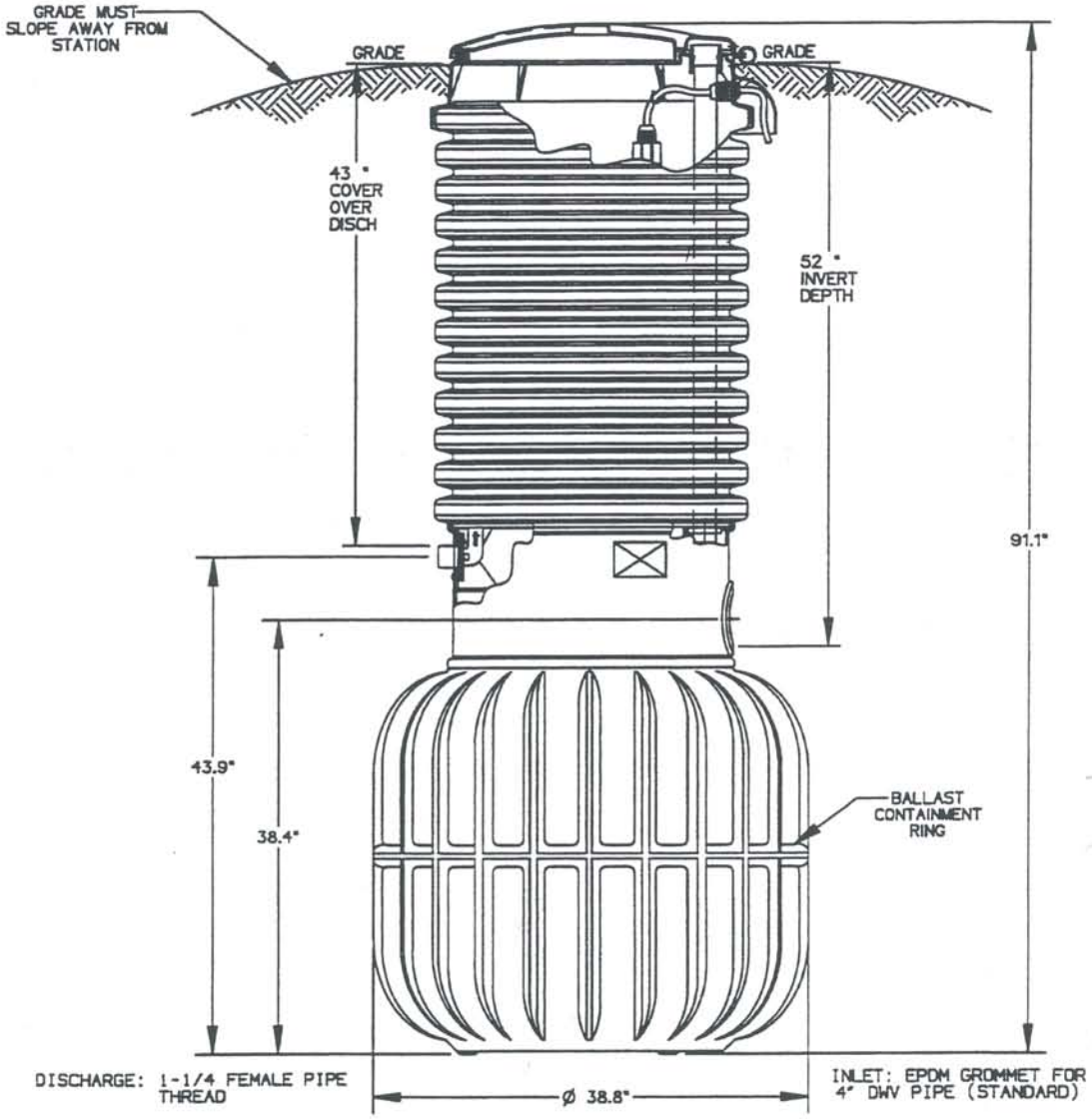

**SEE INSTALLATION INSTRUCTIONS FOR SPECIFIC DIAMETERS AND HEIGHTS REQUIRED FOR PROPER CONTAINMENT WHEN USING 2012 PRE-CAST BALLASTS

NOTE: A CONCRETE ANCHOR OF 3300 lbs (21.7 cu ft) IS REQUIRED ON ALL MODEL 2012 92" STATIONS.

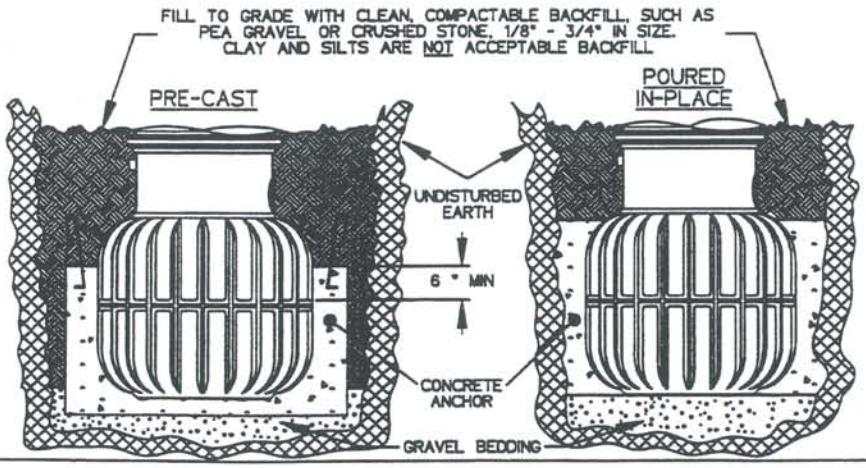

SGS	CAH	1/25/99	A	1/16
DR BY	CHK'D	DATE	ISSUE	SCALE

e|one SEWER SYSTEMS

MODEL 2012-93

PA 1336 P04